Product Details

MOVE 50 elegance

As of: June 16, 2025

Description	Model	Carton Quantity
MOVE 50 elegance 16W	D684	100 pcs per Carton

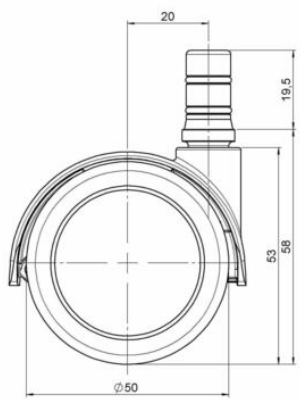

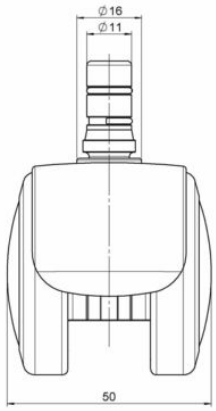

Technical Details

Product Type	Chair caster
Wheel diameter	50mm
Load capacity	50kg
Overall height with fixing	58mm
Wheel:	
Wheel type	Soft wheel
Wheel core / tread color	RAL 9005 Jet black / RAL 9005 Jet black
Housing:	
Housing form	hooded, with neck diameter
Neck diameter	16mm
Housing material	Zinc die-cast
Housing color	RAL 9005 Jet black
Mobility concept	Reverse Brake (braked under load), Reverse Brake
Fixing	No-Noise™ Stem, 11x19,5mm Push fit stem with double circlips, 11,4mm
Description	DUZB684 -24X2NN

Fixings

Compatible with the following available fixings:

No-Noise™ Stem:

- 11x19,5mm with 11,4mm circlip
- 11x19,5mm with 110,6mm circlip

Push fit stems:

- 10x22mm with 10,3mm circlip
- 10x22mm with 10,5mm circlip
- 11x19,5mm with 11,4mm circlip
- 11x19,5mm with 11,8mm circlip
- 11x22mm with 11,4mm circlip
- 11x22mm with 11,6mm circlip
- 11x22mm with 11,8mm circlip

Threaded stems:

- M8x15mm
- M8x20mm
- M8x25mm
- M10x15mm
- M10x20mm
- M10x25mm
- M10x30mm
- M10x40mm
- M12x20mm

Square plates:

- 38x38mm
- 55x55mm
- 60x60mm